SPECIFICATION APPLIED

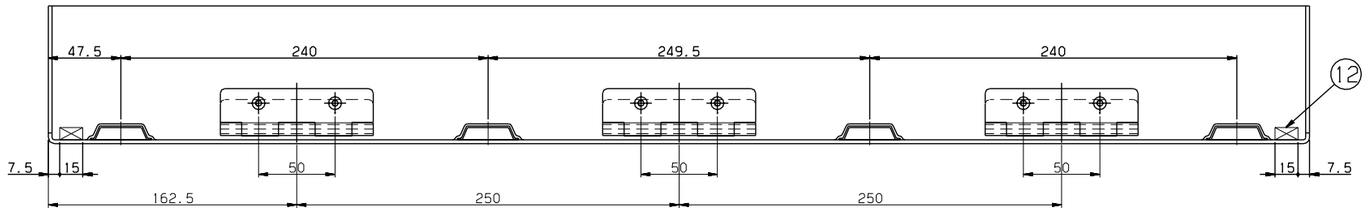

VIEW A-A

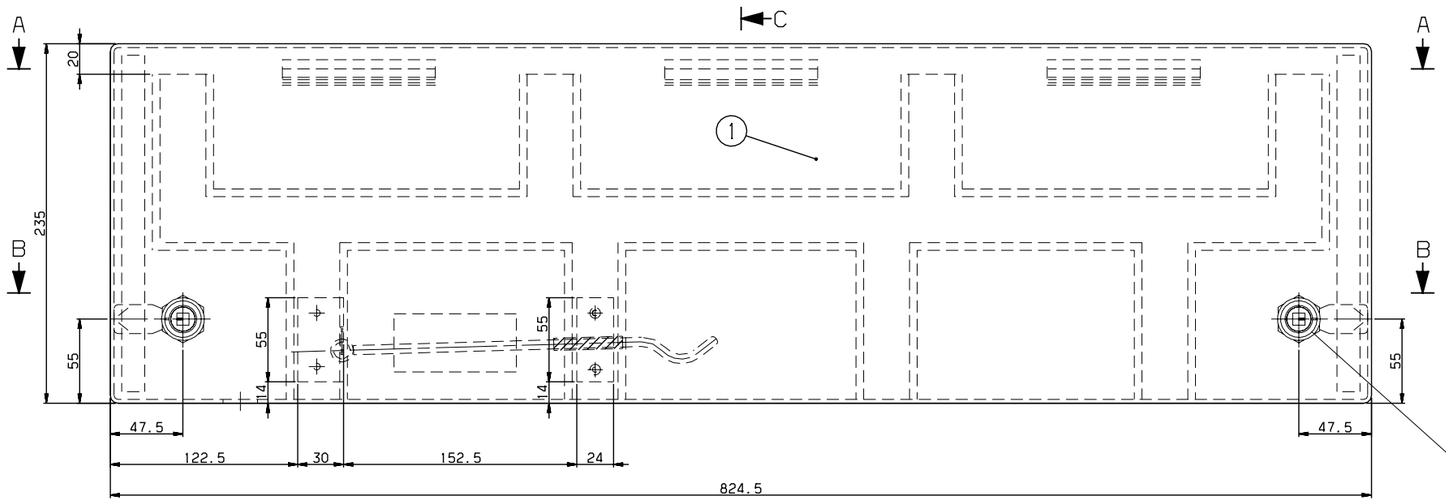

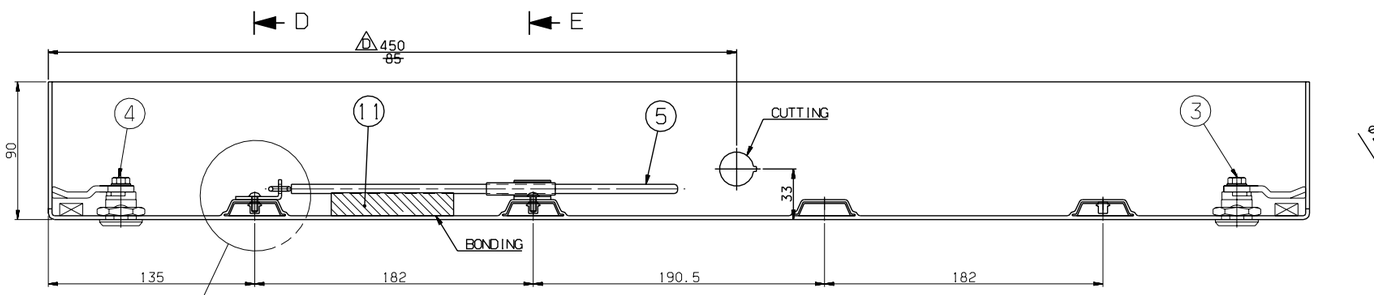

VIEW B-B

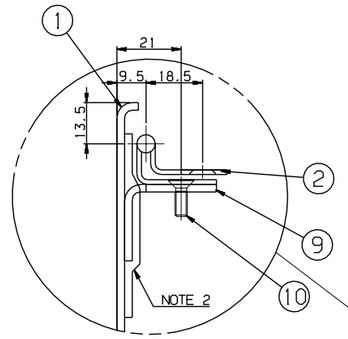

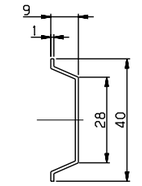

DETAIL #13
SCALE=1/1

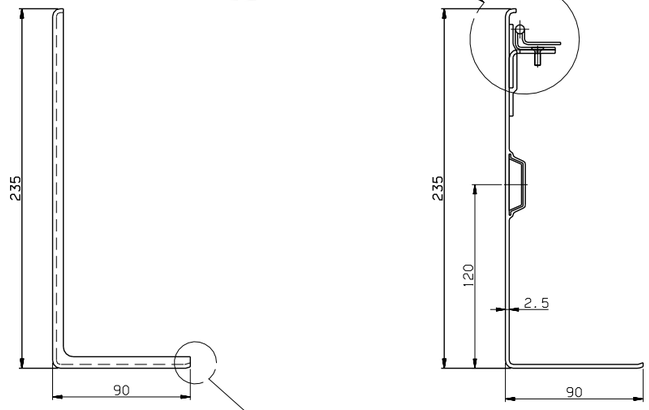

SECTION C-C

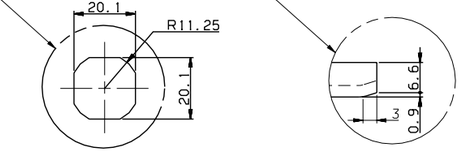

LATCH CUTTING HOLE

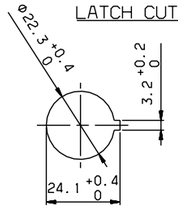

NOTE
1. A INTERIOR PANEL'S COLOR AND SURFACE SHALL BE MANUFACTURED AFTER SAMPLE'S APPROVAL BY CUSTOMER.
2. PART 9 SHALL BE SEALED WITH PART 1 AFTER INSTALLATION.

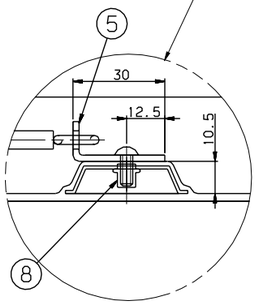

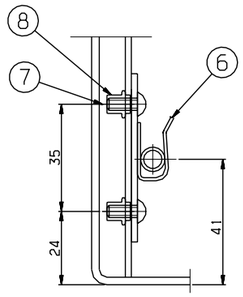

SECTION E-E
SCALE=1/1

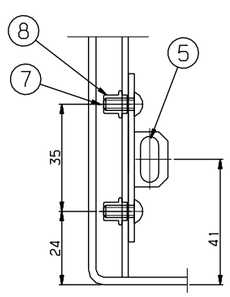

SECTION D-D
SCALE=1/1

CUTTING SIZE

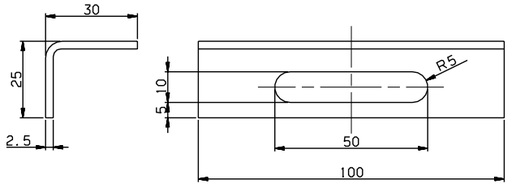

DETAIL #9
SCALE=1/1

NO.	PART NO.	DESCRIPTION	MATERIAL	Q'TY	V.T	REMARKS
13	RFP55022AN0-013	STIFFENER	A1070BR	SET		1T
12	RFP55022AN0-012	PACKING	EPDM FOAM	2		T8X15X225
11	RFP55022AN0-011	PAD.POLE	PE.FOAM	1		T15X22X80
10	RS60607-097S	SCREW F.H	SUS304	6		M4X12
9	RFP55022AN0-009	BRACKET	SUS304	3		T2.5X25X30X600L
8	RFP55022AN0-008	NUTSERT	ASSY	4		9201B/M4/_Z,SPECIALINSERT
7	RS60610-066S	SCREW R.H	SUS304	4		M4X10
6	RFP55030AN0	POLE,CATCHER	ASSY	1		
5	RFP55029AN0	POLE,ASSY	ASSY	1		
4	RFP55028AN0-300	DEVICE,LOCKING	ASSY	1		
3	RFP55028AN0-301	DEVICE,LOCKING	ASSY	1		
2	RFP55027AN0	HINGE	ASSY	3		
1	RFP55022AN0-001	PANEL	FRP	1		

MARK	DATE	DETAIL OF REVISION(E.C ZONE)	E.C NO.	DGN	CHK	APP
DX2	2010.02.09	CHANGED DIMENSION.	3D5101-U090	Y.D.KIM	H.S.KIM	H.G.RYU
CX3	2009.12.28	CHANGED PART NO 1,8,9,11,12	3D5101-U081	Y.D.KIM	H.S.KIM	H.G.RYU
BX4	2009.12.10	CHANGED DIMENSION.	3D5101-U060	Y.D.KIM	H.S.KIM	H.G.RYU
AX7	2009.05.06	ADDED PART NO.13/CHANGED PART NO 8.	3D5101-U088	Y.D.KIM	H.S.KIM	H.G.RYU

승인 APP	검도 CHK	설계 DGN	제도 DRG
H.G.RYU 2008.10.15	H.S.KIM 2008.10.15	Y.D.KIM 2008.10.10	S.H.SONG 2008.10.10

재질 MAT'L ASSY
용융점 G.W
일반공차 MC B WD B CT B
SIZE A1

명칭 TITLE: COVER, INSIDE, TYPE C

도면 번호 DRG. NO: RFP55022AN0 MS | Ver. 00 | Rev. -D | 3D5101 | RFP- | 난-PRJT | 참관본승

SCALE 1/2 | SHEET 1 of 1

참관용 REF. NO. FPP08368

HYUNDAI Rotem 현대로템주식회사

구분		A	B
일반공차 GENERAL TOLERANCE	~ 400	2	4
	~ 30	2	3
	~ 10	1	1.5
	< 3	0.5	1
절삭가공 MACHINING	~3150	-	7
	~1600	4	5
	~ 800	3	4
	~ 400	2	3
	~ 200	1.5	2
	~ 100	1	1.5

등급 GRADE	A	B
주조 CASTING 치수 구분		
~20M	8	14
~15M	7	12
~12M	6	10
~9M	5	8
~4M	4	6
~2M	3	4
~1M	2	3
~315	1	2
~120	1	2
~30	1	1

등급 GRADE	A	B	C
용접 WELDING 구분			
~20M	-	6.0	8.0
~15M	-	5.0	7.0
~12M	-	4.0	6.0
~9M	-	3.0	5.0
~4M	0.8	2.0	4.0
~2M	0.5	1.2	3.0
~1M	0.3	0.8	2.0
~315	0.2	0.5	1.2
~120	0.15	0.3	0.8
~30	0.1	0.2	0.5

등급 GRADE	A	B	C
가공 MACHINING (±)			
3~6	0.05	0.1	0.2

본 도면은 당사 재산권에 해당하며 무단복사/배포 금지됨. PROPERTY OF ISSUING ENTITY, CANNOT BE DISTRIBUTED OR REPRODUCED WITHOUT AUTHORIZATION.

CATIA